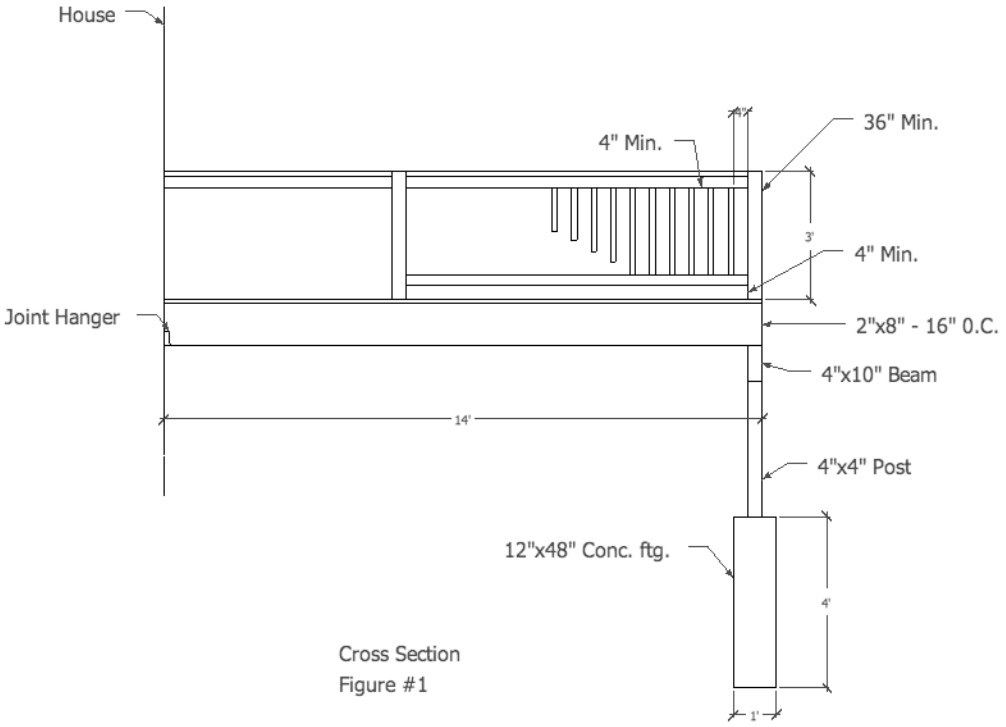

Cross Section
Figure #1

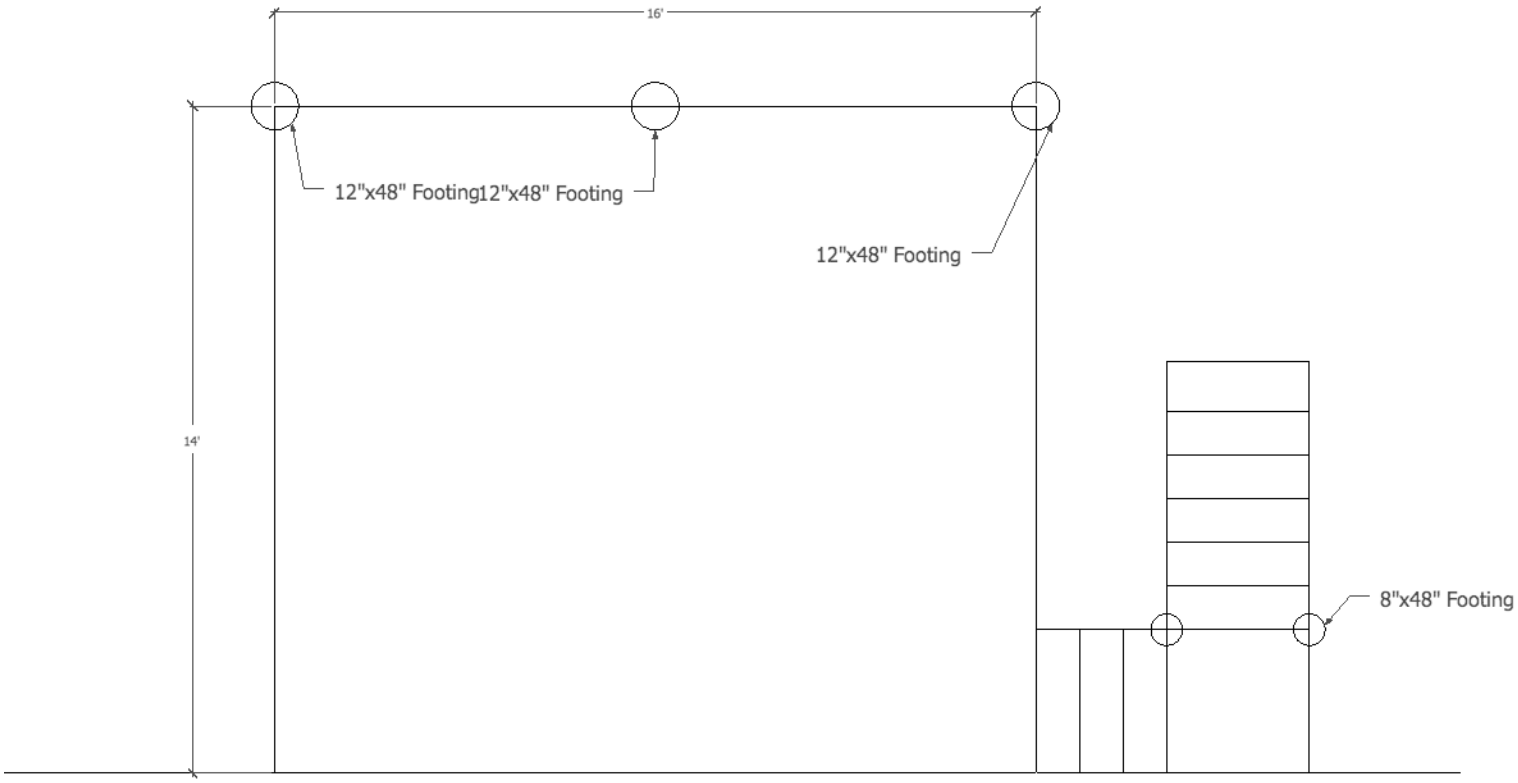

Footing Layout
Figure #1